Forward Kinematics

The **forward kinematics** problem statement: Determine the configuration of the end-effector given the relative configuration of each pair of adjacent pair of links of the robot.

Definitions and Restrictions

Open-Chain Manipulators	Joints #'d from 1 to ***n***, starting at base. Link 0 is the base. Link ***n*** is the end-effector.
Revolute Joints	$\theta_i \in \mathbb{S}' = [0, 2\pi]$ (unit circle)
Prismatic Joints	$\theta_i \in \mathbb{R}$ along directed axis
Degrees-of-Freedom	The # of DOFs of an open chain manipulator is equal to the # of joints.
Joint Space Q	All possible combinations of the joint variables of the robot.

The joint space Q is the Cartesian product of the individual joint spaces. For example, consider a four DOF robot with 3 revolute joints and one prismatic joints (EX 3.1):

$$\theta = (\theta_1, \theta_2, \theta_3, \theta_4) \in \mathbb{S}' \times \mathbb{S}' \times \mathbb{R} \times \mathbb{S}' = Q$$

Forward Kinematics

Robot Manipulator

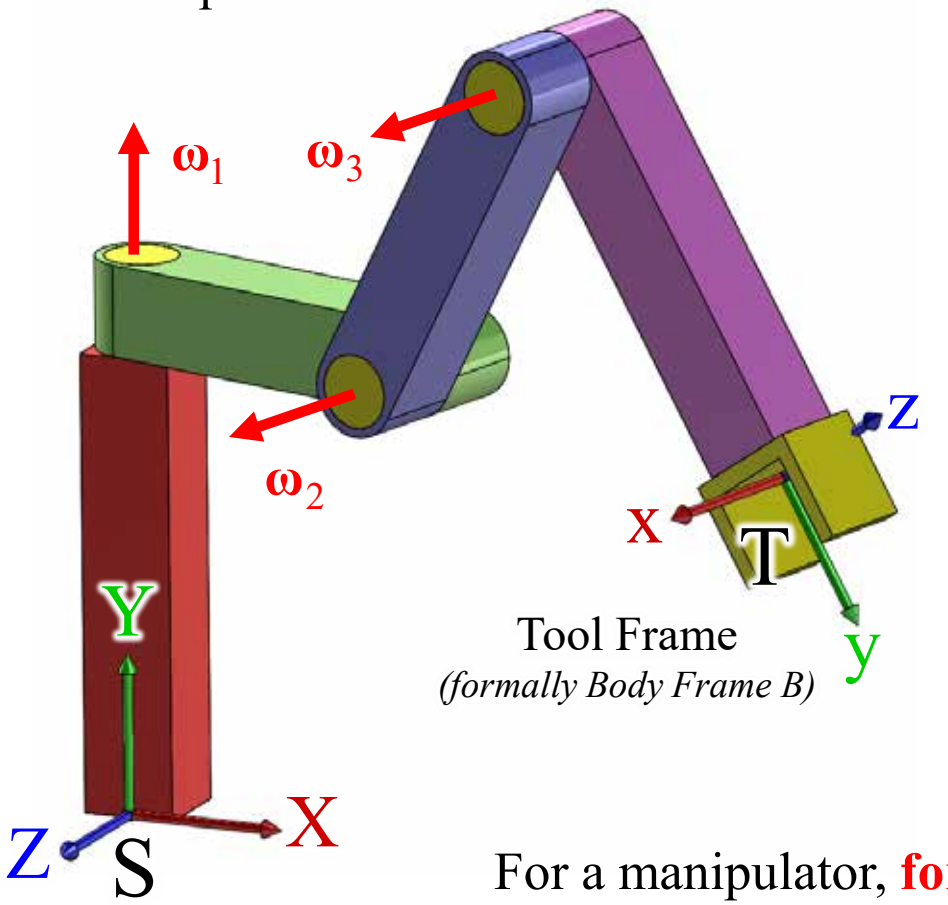

Tool Frame
(formally Body Frame B)

Spatial Frame
(formally Spatial Frame A)

Robot Manipulator in the Home Position

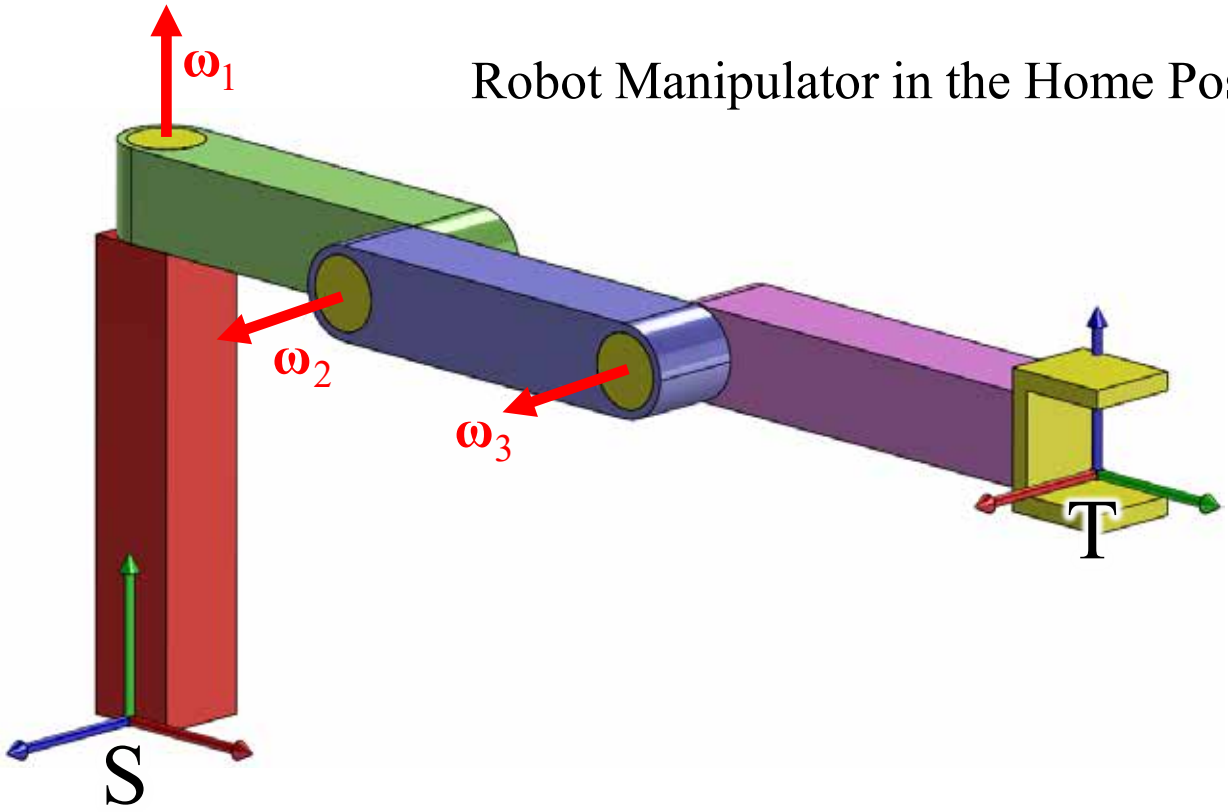

For a manipulator, **forward kinematics** is a map from joint space Q to tool space SE(3):

$$\mathbf{g}_{st} : Q \rightarrow SE(3)$$

Forward Kinematics via. Product of Exponentials

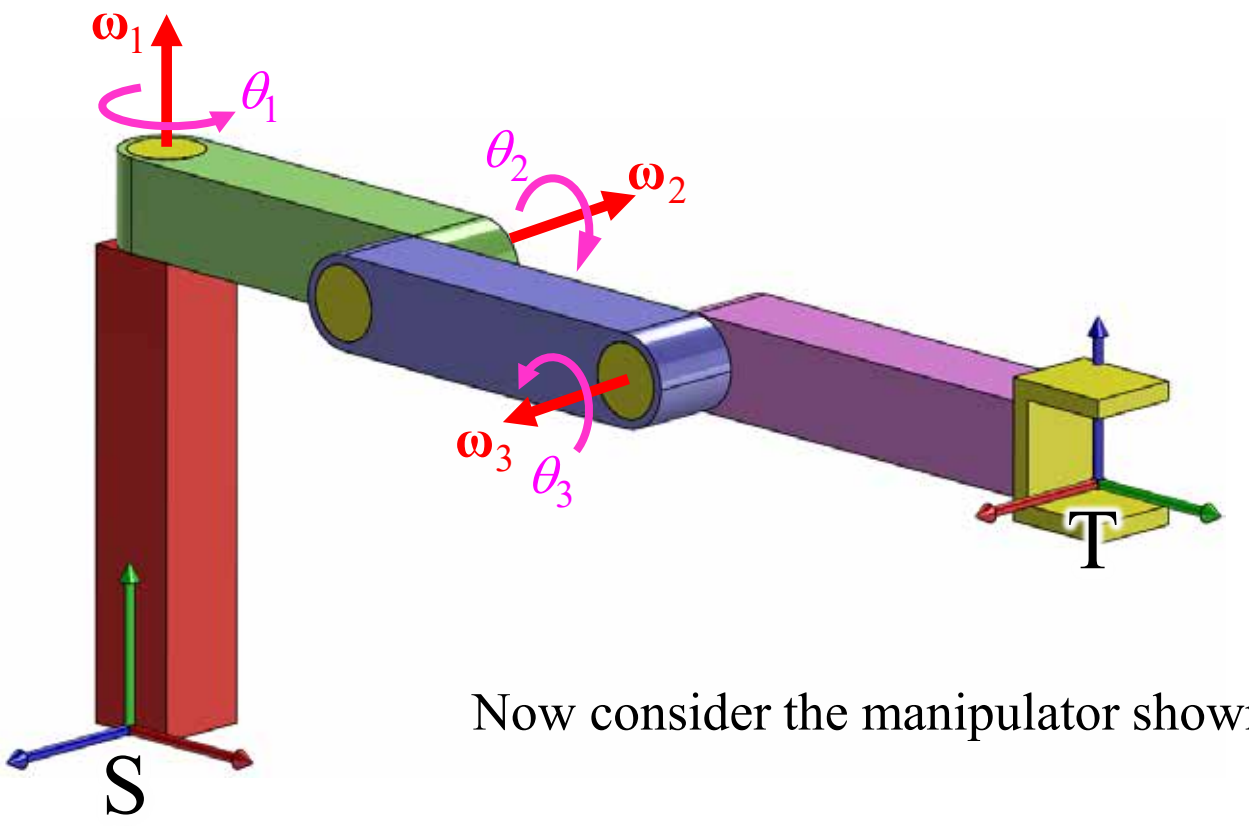

Recall rigid motion of a twist:

$$\mathbf{g}_{st}(\theta) = e^{\hat{\xi}\theta}\mathbf{g}_{st}(0)$$

Now consider the manipulator shown in the home position:

Map from Link 3 to Link 2: $\mathbf{g}_{st}(\theta_3) = e^{\hat{\xi}_3\theta_3}\mathbf{g}_{st}(0)$ $\quad(\theta_1 \text{ \& } \theta_2 \text{ fixed})$

Map from Link 2 to Link 1: $\mathbf{g}_{st}(\theta_2,\theta_3) = e^{\hat{\xi}_2\theta_2}\mathbf{g}_{st}(\theta_3)$ $\quad(\theta_1 \text{ fixed})$

Map from Link 1 to Spatial Frame: $\mathbf{g}_{st}(\theta_1,\theta_2,\theta_3) = e^{\hat{\xi}_1\theta_1}\mathbf{g}_{st}(\theta_2,\theta_3)$

Now combine: $\mathbf{g}_{st}(\boldsymbol{\theta}) = e^{\hat{\xi}_1\theta_1}e^{\hat{\xi}_2\theta_2}e^{\hat{\xi}_3\theta_3}\mathbf{g}_{st}(0)$

Forward Kinematics Summary

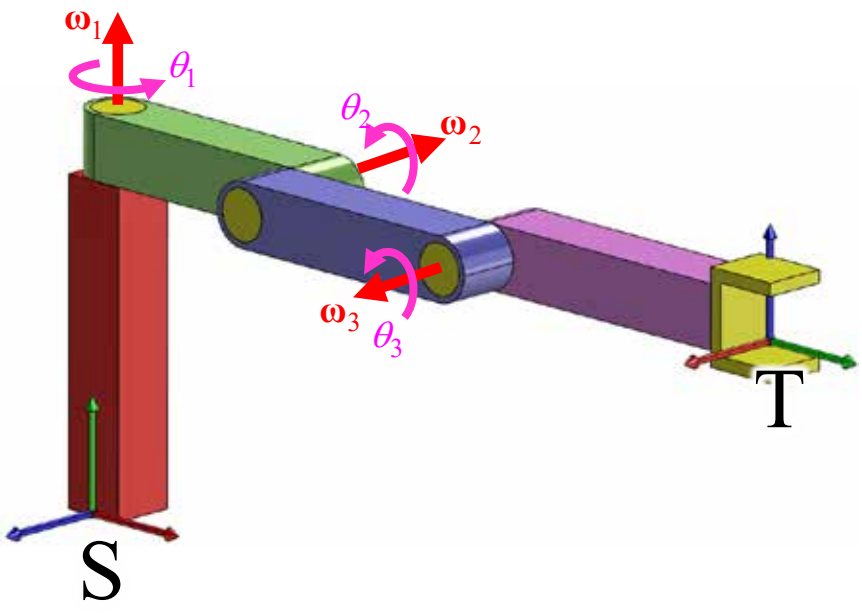

FORWARD KINEMATICS PROCEDURE:

1. Define the home position: $\mathbf{g}_{st}(0) = \begin{bmatrix} \mathbf{R}_{st}(0) & \mathbf{p}_{st}(0) \\ \mathbf{0} & 1 \end{bmatrix}$

2. Define the joints twists in the home position:

Revolute Joints : $\xi_i = \begin{bmatrix} -\hat{\boldsymbol{\omega}}_i \mathbf{q}_i \\ \boldsymbol{\omega}_i \end{bmatrix}$

$\boldsymbol{\omega}_i$: axis of rotation of the ith joint, relative to fixed frame S, in the home position

$\mathbf{q}_i$: any point on $\boldsymbol{\omega}_i$ relative to fixed frame S, in the home position

Prismatic Joints : $\xi_i = \begin{bmatrix} \mathbf{v}_i \\ 0 \end{bmatrix}$

$\mathbf{v}_i$: unit vector of the ith joint pointing in the direction of translation, relative to fixed frame S, in the home position

3. Applied the Forward Kinematics equation:

$$\boxed{\mathbf{g}_{st}(\boldsymbol{\theta}) = e^{\hat{\xi}_1 \theta_1} e^{\hat{\xi}_2 \theta_2} \ldots e^{\hat{\xi}_n \theta_n} \mathbf{g}_{st}(\mathbf{0})}$$

$\mathbf{g}_{st}(\mathbf{0})$: Home configuration of tool frame T